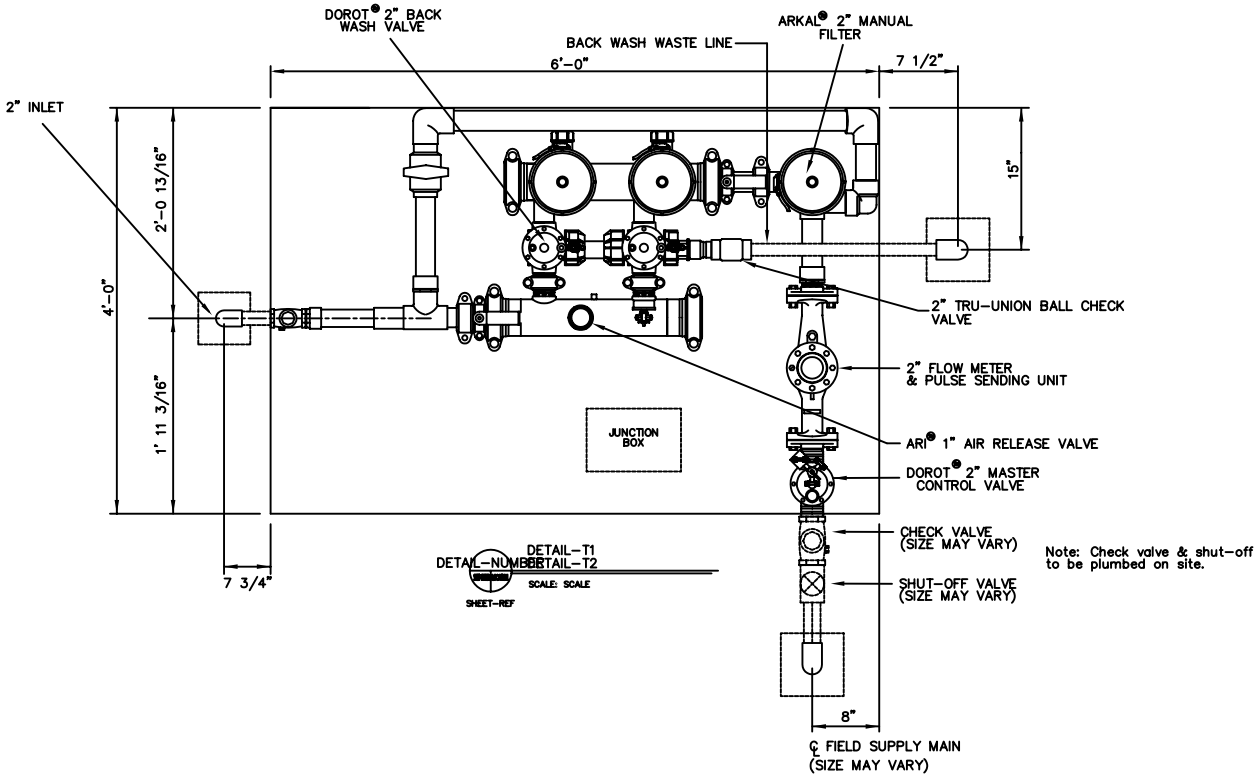

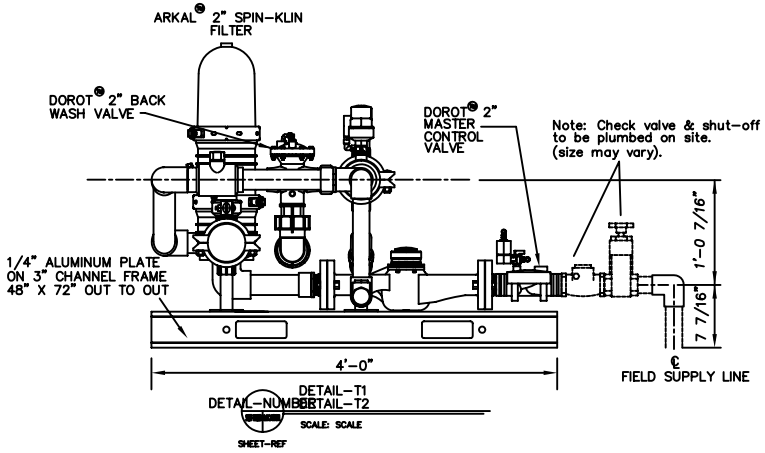

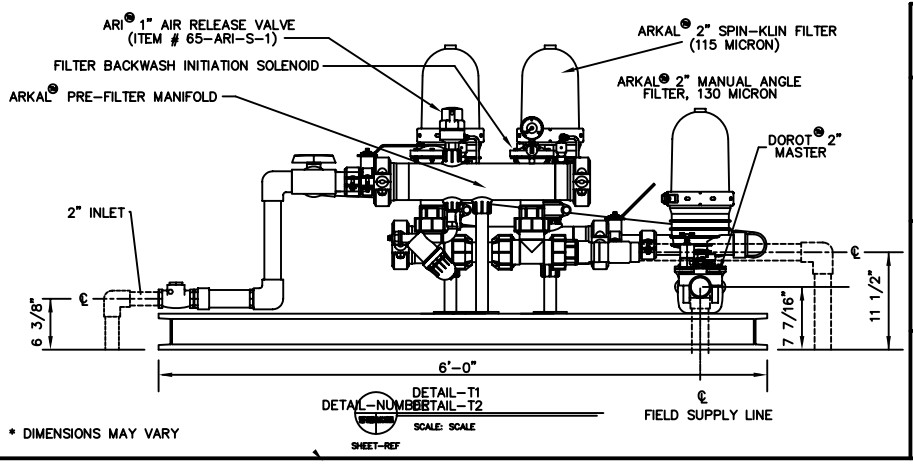

* DIMENSIONS MAY VARY

ASD-60
TYPICAL LAYOUT

AMERICAN MANUFACTURING CO.

P.O. BOX 97
Elkwood, VA 22718

(540) 825-7234
Fax: (540) 825-1785
1-800-345-3132

©2007 ALL RIGHTS RESERVED

Presented by:

American Manufacturing Company Incorporated

Application Note:

The suggested layouts are not finished fabrication drawings. The user of these plans is responsible for verifying that the suggested design of any substitutions or modifications meet all local building and enviromental codes and requirements, for verifying that the suggested design or any substitutions or modifications are consistant with conditions at the construction site, for proper construction and use of materials, and for the completed system. Check your suggested design requirements with Waste Water Systems or your Perc-Rite® distributor.