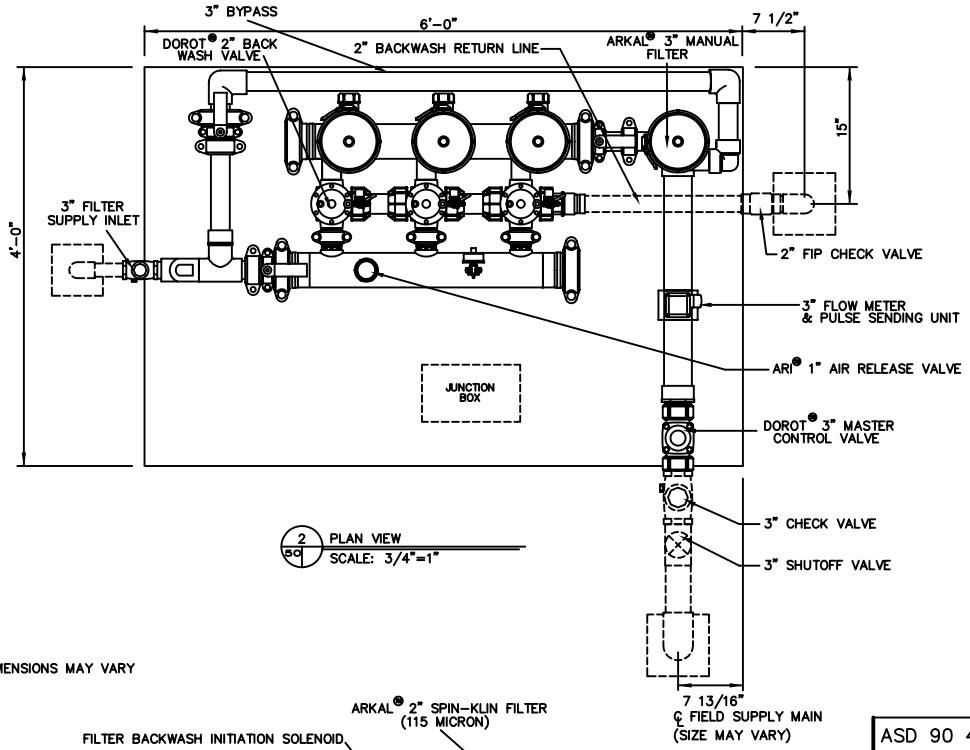

2 SQ PLAN VIEW
SCALE: 3/4"=1"

* DIMENSIONS MAY VARY

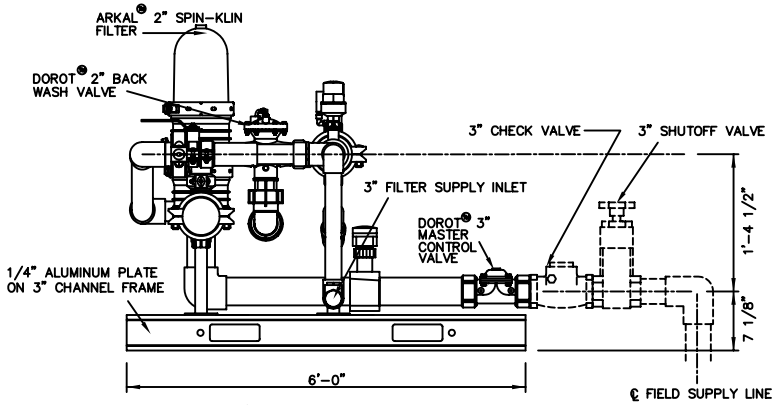

3 SQ LEFT ELEVATION
SCALE: 3/4"=1"

* NOTE: CHECK AND SHUT OFF VALVES TO BE PLUMBED ON SITE.

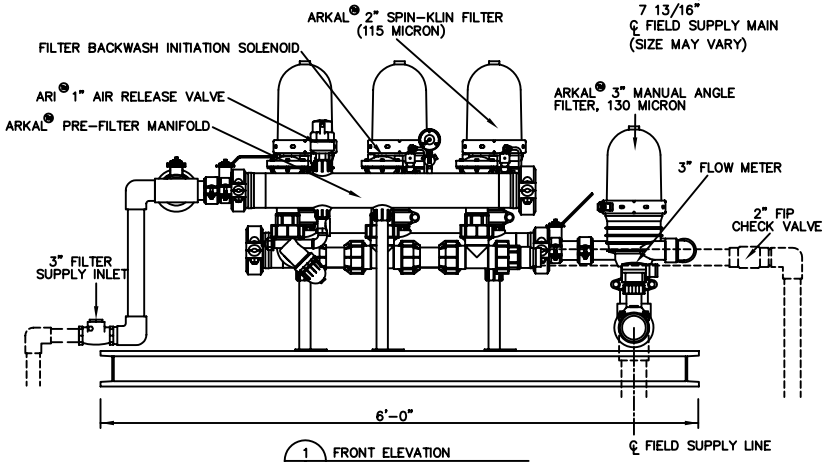

1 SQ FRONT ELEVATION
SCALE: 3/4"=1"

ASD 90 4x6 NO PMP BYPASS.DWG

ASD 90
TYPICAL LAYOUT

AMERICAN MANUFACTURING CO.
P.O. BOX 97
Elkwood, VA 22718
(540) 825-7234
Fax: (540) 825-1785
1-800-345-3132

©2007 ALL RIGHTS RESERVED

90 GPM FILTER UNIT
4x6 SKID, NO PUMP, BYPASS

Drawn by: RJW	Checked by:
Date: 07/16/04	Date:

Application Note:
The suggested layouts are not finished fabrication drawings. The user of these plans is responsible for verifying that the suggested design of any substitutions or modifications meet all local building and enviromental codes and requirements, for verifying that the suggested design or any substitutions or modifications are consistant with conditions at the construction site, for proper construction and use of materials, and for the completed system. Check your suggested design requirements with Waste Water Systems or your Perc-Rite® distributor.